EAE LIGHTING

Tower Pole

Installation Manual

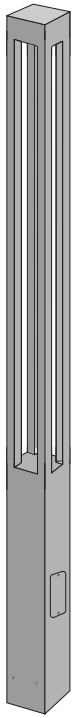

⚠ WARNINGS

The installation of this lighting pole and all operations performed during installation must be carried out in accordance with national security practices. Installation and commissioning of the product should only be performed by a professional electrician. The manufacturer cannot be held responsible for any damage or problems that may occur due to incorrect installation or improper use. In case of any modification to the product, the responsibility arising from these changes will belong to the person/institution making the modification.

The anchorage set and rods are not included in the product package; they must be provided separately.

1 ANCHORAGE AND CONCRETE DETAILS

For a safe and durable lighting pole installation, pour the concrete in dimensions (depth and widths A, B, C) suitable for the pole length specified in Table-1.

While the concrete is still wet, place the anchorage template and rods (studs) in accordance with the axis intervals (L and M dimensions) shown in the technical drawing. To ensure that the anchorage set is perfectly parallel to the ground, be sure to verify it using a spirit level.

Ensure that the main network cable remains at least 100 cm outside (clearance) the concrete surface for easy connections.

The anchorage set and rods are not included in the product package; they must be provided separately.

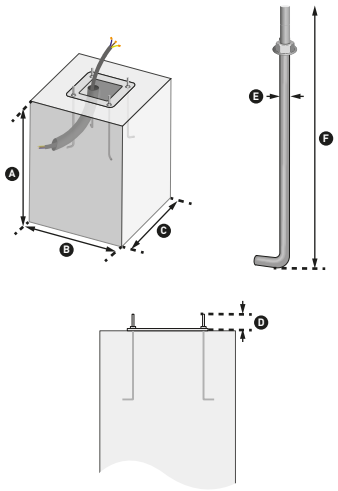

2 PRODUCT PREPARATION

Be careful against surface scratches and impacts when removing the product from its package.

After ensuring that the concrete has hardened, place the flange provided with the pole onto the anchorage rods.

Before fixing, check that all studs are perfectly aligned with the flange holes.

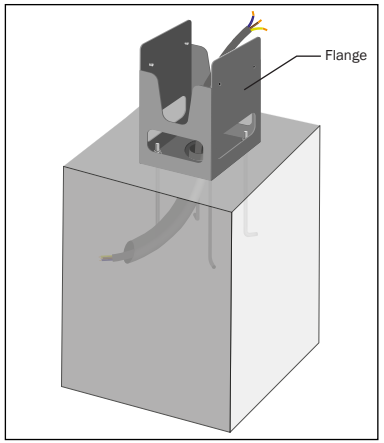

3 INSTALLATION OF THE PRODUCT

⚠ Energy must always be disconnected during installation. It must be ensured that all safety precautions are taken against potential problems before the system is energized.

A Place the lighting pole vertically onto the prepared flange. Securely fix the pole to the slots on the flange using 4 screws so that it does not shake.

B Pass the electrical cable coming out of the concrete surface through the pole and lead it to the fuse box gap. Make the connections inside the fuse box. Ensure that the grounding line is properly connected for safety.

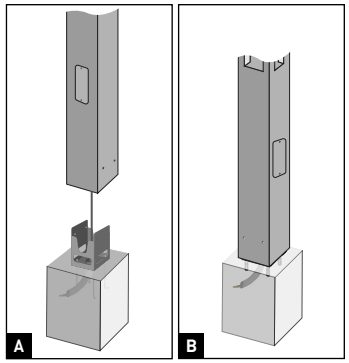

Electrical Connection

ON/OFF

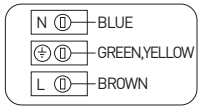

220-240V AC~ 50-60Hz

DALI

Brown : F
Blue : N
Green-Yellow :Ground
Black : DALI (+)
Grey : DALI (-)

v. 01.25

Tower Pole Concrete and Anchor Set Dimensions (Table.1)

Pole Height	Concrete Dimensions			Stud Dimensions			Anchorage Hole Dimen.
	A	B	C	D	E	F	M
2000	500	500	500	30	Ø 10	250	100
2500	500	500	500	30	Ø 10	250	100
3000	600	500	500	30	Ø 12	350	110
4000	600	600	600	30	Ø 12	500	130
5000	700	600	600	30	Ø 14	500	130

* All dimensions are given in millimeters (mm).

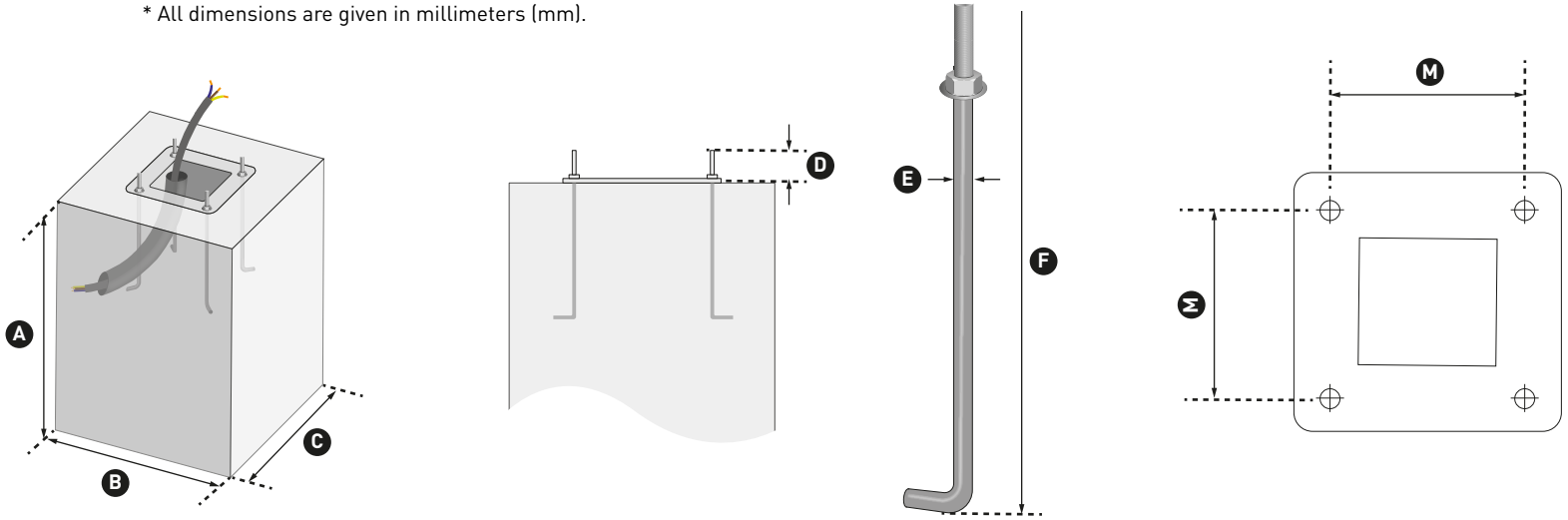

⚠ WARNINGS

Concrete and stud dimensions are provided as a reference for general use. However, the climate conditions of the installation area (e.g., wind load, snow load, temperature changes) and soil properties (e.g., hardness, bearing capacity, groundwater level) may require changes to these dimensions. Therefore, before installation, appropriate dimensions should be determined by considering the soil analysis and climate conditions of the region, and if necessary, these values should be re-evaluated by an engineering consultancy or an expert team